Product Detail - Vacuum Holster™, High Capacity

The Vacuum Holster™ offers effective exhaust removal and simple, easy hose storage.

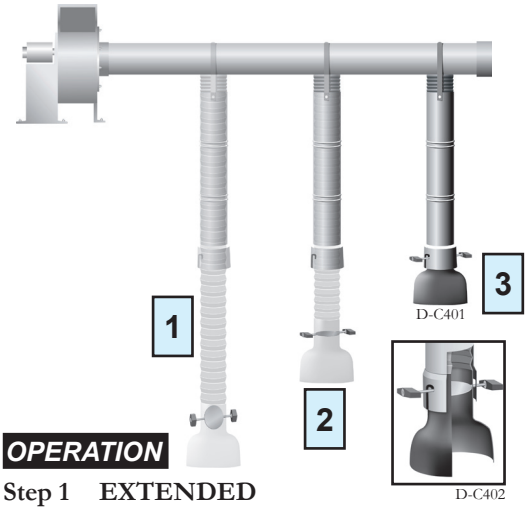

OPERATION

Step 1 EXTENDED
The extended hose and opened damper permit airflow for exhaust extraction.

Step 2 RETRACTING
The closed damper restricts air flow and causes the exhaust hose to retract into the Hose Holster due to the negative pressure from the exhaust fan.

Step 3 STORED (see detail)
The tailpipe adapter rests in the notches of the Hose Holster, even when the fan is off.

The Vacuum Holster™ consists of three components:

#1: EXHAUST HOSE

I-H6S-01

Part #: H8S??

- Entire hose is made of a silicon-Kevlar composite, for 600F continuous and 700F intermittent
- **Non-telescoping**: The hose is one continuous piece, and has a 8" diameter its entire length, improving flow
- External helix acts as a wearstrip, protecting the hose composite from contact with the floor
- Light (1.20 lbs/ft), flexible, and flame resistant
- 17', 20', 25' lengths are standard
- Includes two clamps.

#2: TAILPIPE ADAPTER

I-A6S-01

Part #: A8STA

- Non-scratch silicon rubber boot
- 8 3/4" rubber boot can fit nearly all pipes
- Attachment clamp secures tailpipe adapter to the pipe
- Rotational damper (operated by turning T-handles) prevents tempered air from exiting the facility
- Easily connects to exhaust cane, extension hose, or wye assembly
- Weight: 6 lbs

#3: HOSE HOLSTER

I-HH6-01

Part #: VH811

- Stores out-of-use exhaust hoses
- Color can be specified (Granite black is default).
- Made of durable polyethylene
- Hose Holster can be field-cut for low-ceiling applications
- Weight - 26 lbs; standard height - 72"

Each Vacuum Holster™ assembly requires one of the following suspension methods:

BRACKET SUSPENSION KIT

- **Used in applications where there is no bridge crane**
- Ascent Systems supplies a suspension rim that is fastened to angle iron/uni-strut bracing by installer
- Three flexible suspension straps connect the Hose Holster to the suspension rim
- Bottom rim of tailipipe adapter to be 6'6" AFF
- Hose Holster can be cut to length to accommodate low-ceiling applications
- Weight: 3 lbs

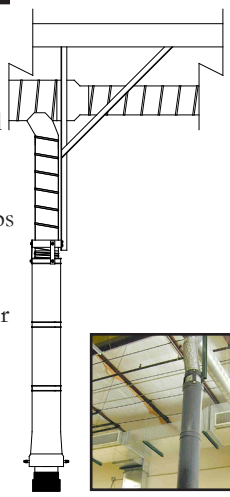
F-I815

I-A6B-01

PIVOTING BOOM ARMS

I-A6P-03

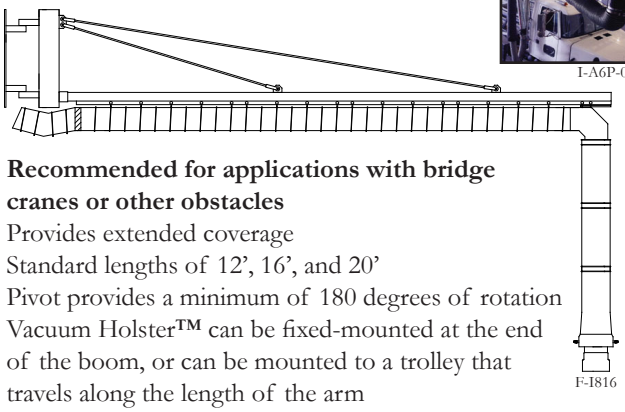
F-I816

- **Recommended for applications with bridge cranes or other obstacles**
- Provides extended coverage
- Standard lengths of 12', 16', and 20'
- Pivot provides a minimum of 180 degrees of rotation
- Vacuum Holster™ can be fixed-mounted at the end of the boom, or can be mounted to a trolley that travels along the length of the arm
- The 20' arm, with a Vacuum Holster™ with 25' hose, provides an effective coverage radius of 40'

Ascent Systems, Inc.
www.ascentsystemsinc.com
sales@ascentsystemsinc.com
888-239-0054

ADVANCED EXHAUST REMOVAL SYSTEMS

ASCENT SYSTEMS
VACUUM HOLSTER™
EMISSIONS REMOVAL SYSTEM

Product Detail - Vacuum Holster™, High Capacity

Common system options in high capacity applications:

#1: WYE ASSEMBLY

Part #: A6WYE

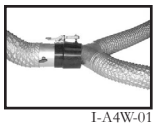
I-A4W-01

- Designed to connect to dual exhausts
- Wye connector couples with the Ascent Systems Tailpipe Adapter
- 4" x 4' exhaust hose branches, made of silicon-Kevlar
- End of each branch features a tailpipe adapter, less the damper assembly
- Wt: 12 lbs.

#2: EXTENSION HOSES

Part #: H8C??-EX

I-H6S-11

- Hose is made of silicon-Kevlar composite, for 600F continuous and 700F intermittent
- Connection end features Ascent Systems Tailpipe Adapter, less the damper assembly.
- Opposite end couples with Ascent Systems tailpipe adapter
- Wt: 8 lbs + (1.2 lbs/ft) of hose

#3: REMOTE START FAN CONTROL

I-A3C-01

Part #, Panel: A3CP;
Part #, Transmitter: A3TK.

- Enables service technician to activate/deactivate the exhaust fan by a wireless transmitter
- Reduces energy costs that arise if fan runs when no drops are in service - One control panel per fan is required; one transmitter per Vacuum Holster™ is recommended.
- Transmitter, 1 lb.; control panel, 12 lbs.

#4: EXHAUST CANE

Part #: A8EXC-07

I-A6E-05

- Designed to connect to vertical stacks
- Wye connector couples with the Ascent Systems Tailpipe Adapter
- 4" x 4' exhaust hose branches, made of silicon-Kevlar
- End of each branch features a tailpipe adapter, less the damper assembly
- Weight: 22 lbs.

Dimensions and weights: Vacuum Holster™ Assembly

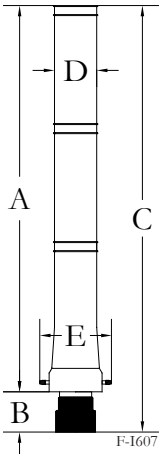

Weights - 8" Vacuum Holster™ (lbs.)

Hose Length	Compact	Extended
17'	53	57
20'	56	60
25'	n/a	66

Dimensions - Vacuum Holster™

Dimension	Holster Model	
	8" Compact*	8" Extended
A	50"	72"
B	8 1/2"	8 1/2"
C	58 1/2"	80 1/2"
D	9 7/8"	9 7/8"
E	16 1/4"	16 1/4"

*Note: For A and C, the compact dimension is the minimum; the extended dimension is the maximum. The installer may field cut the Hose Holster between these two figures.

Specifications for the Vacuum Holster™:

The vehicle exhaust hose drops shall be the Ascent Systems Vacuum Holster™, Part # VH8(17/20/25)-S(E/C). The system shall utilize the static pressure from the exhaust fan for hose storage, and shall not rely upon hosereels, balancers, or other such devices. For sufficient air flow, the hose drops shall have a uniform 6" hose diameter for the entire hose length. The part number above incorporates the following components:

A. **Exhaust Hose.** The diameter of the exhaust hose shall be 8" for the entire hose length. The overall length shall be __ (17', 20', or 25'). To compress into the Hose Holster, the exhaust hose shall have a compression ratio of 6:1. The exhaust hose shall have a composite made of a Silion-Kevlar fabric, for temperature tolerances of 600F continuous and 700F intermittent. To strengthen and protect the hose composite, the hose shall include a galvanized external helix to function as a wear strip. Hose to be flame resistant.

B. **Tailpipe Adapter:** The boot of the tailpipe adapter shall be made of non-scratch silicon with a 8 3/4" round opening. The tailpipe adapter shall include an attachment clamp to secure the tailpipe adapter to the exhaust pipe. The tailpipe shall be coupled to the exhaust hose by a rotational damper assembly, which shall include a SS damper plate whose position is main tained by spring tension. The axles of the damper assembly shall rest in the notches of the Hose Holster.

C. **Hose Holster:** The Hose Holster shall enclose the 8" diameter exhaust hose. The lower rim of the Hose Holster shall be belled to facilitate the entry of the exhaust hose. The belled end of the Hose Holster shall be provided with two notches, in which the axle of the rotational damper rest when the Vacuum Hol ster™ is not in use. The Hose Holster shall be made of 1/4" polyethylene. Granite-black is the standard color, (though oth ers may be specified.

NOTE: Specifications for suspension kits, system options, and exhaust fans are available at www.ascentsystemsinc.com.

Ascent Systems, Inc.
www.ascentsystemsinc.com
sales@ascentsystemsinc.com
888-239-0054

ADVANCED EXHAUST REMOVAL SYSTEMS

VACUUM HOLSTER™ EMISSIONS REMOVAL SYSTEM